REVISIONS			
REV.	DESCRIPTION	DATE	APPROVED
A	INITIAL RELEASE	07/17/2019	MMILLER

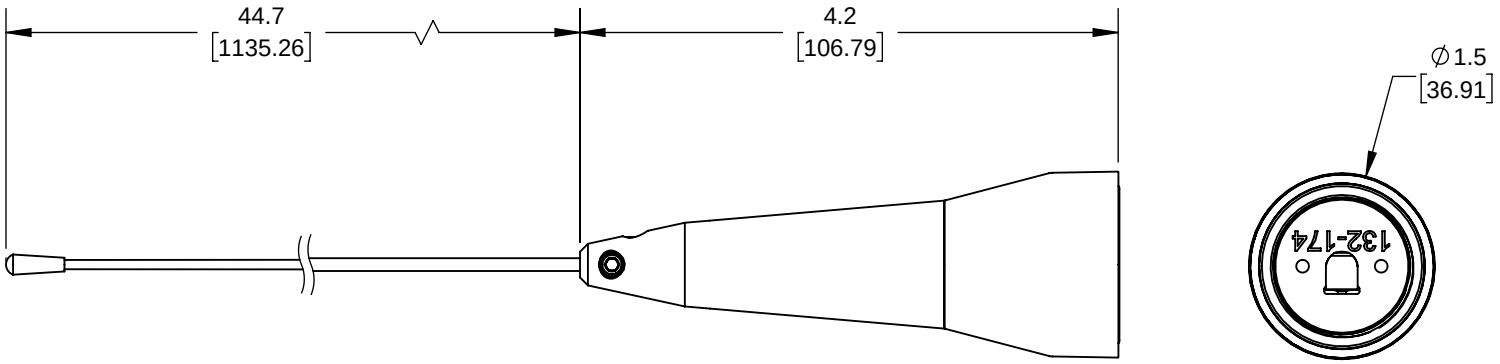

UNLESS OTHERWISE SPECIFIED
LEADING DIMENSIONS ARE INCHES
DIMENSIONS IN [ ] ARE MILLIMETERS

TOLERANCES:

.X=Ñ .2	[5.08]	FRACTIONS
.XX=Ñ .01	[.25]	Ñ1/32
.XXX=Ñ .005	[.13]	ANGLES Ñ1Á

ALL DIMENSIONS SHOWN
ARE FOR REFERENCE ONLY.

THIRD-ANGLE PROJECTION

an INFINITE brand
50 High Street, West Mill, 3rd Floor, Suite #30
North Andover, MA 01845 USA.
Phone: 1.800.341.5266 b 1.978.682.6936
Fax: 1.978.689.9484
www.L-com.com be-mail: CustomerService@L-com.com

THE INFORMATION AND
DESIGN IN THIS DOCUMENT
IS THE PROPERTY OF
L-COM GLOBAL CONNECTIVITY.
ALL RIGHTS RESERVED.

SHEET	OF
1	1

SCALE N/A

SIZE	CAGE	DRAWN BY	PART NUMBER	REV
A	43321	BPUCHASKI	HG143PS-NMO	A

THESE COMMODITIES, TECHNOLOGY OR SOFTWARE WERE EXPORTED FROM THE UNITED STATES IN ACCORDANCE WITH THE EXPORT ADMINISTRATION REGULATIONS. DIVERSION CONTRARY TO U.S. LAW PROHIBITED.

T-Rev.B