THE INFORMATION CONTAINED IN THIS DRAWING IS THE SOLE PROPERTY OF L-COM, INC. ANY REPRODUCTION IN PART OR WHOLE WITHOUT THE WRITTEN PERMISSION OF L-COM, INC. IS PROHIBITED.

REVISIONS

REV	DESCRIPTION	DATE	APPROVED
A	INITIAL RELEASE	6/29/10	D.GRIFFIN

DESCRIPTION	MATERIAL	FINISH
BODY	BRASS	NICKEL
DIELECTRIC	TEFLON	-
CENTER PIN	BRASS	GOLD
LOCK WASHER	BRASS	NICKEL
NUT	BRASS	NICKEL

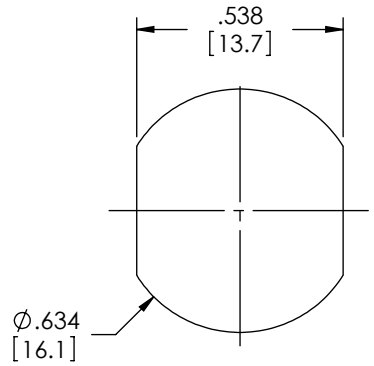

RECOMMENDED PANEL CUTOUT

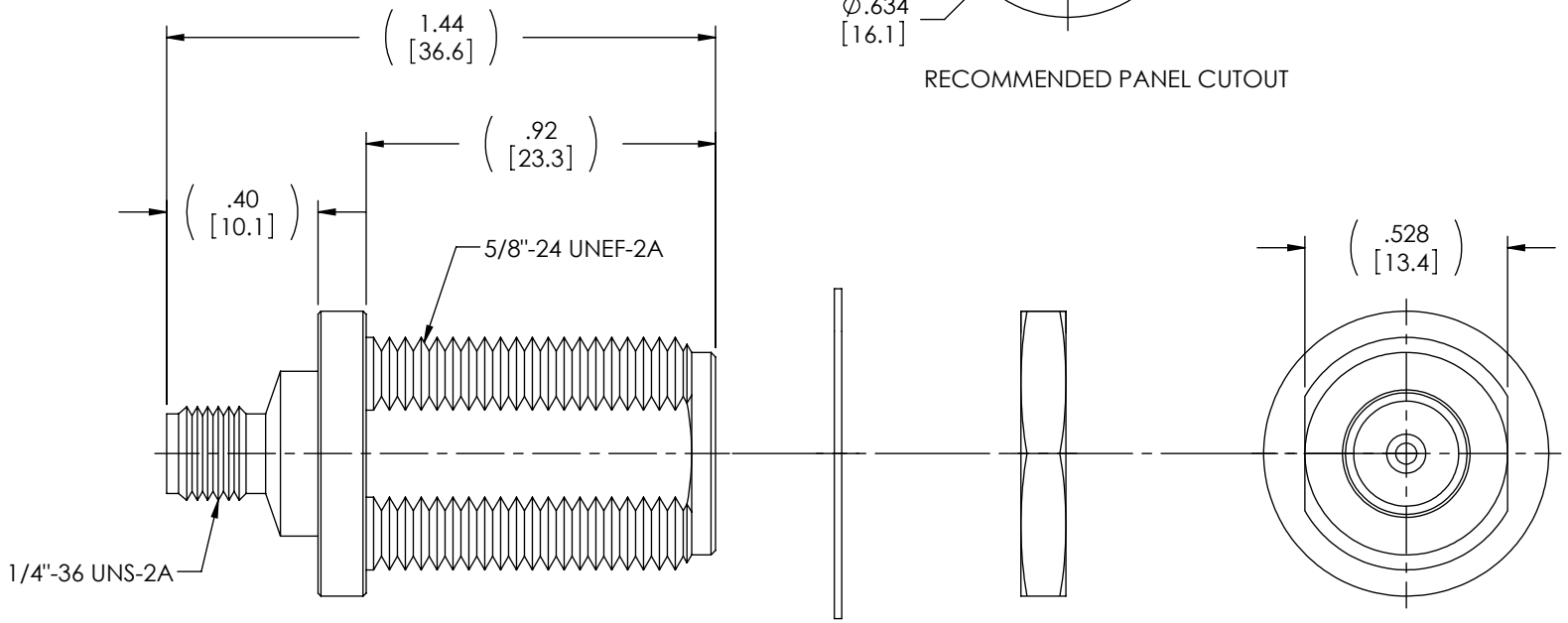

BODY LOCK WASHER NUT

NOTES:

ELECTRICAL:
IMPEDANCE: 50 OHMS
FREQUENCY RANGE: DC ~ 6 GHz
VOLTAGE RATING: 500 VOLTS PEAK
WITHSTAND VOLTAGE: 1000V
INSERTION LOSS: .15 dB MAX

MISCELLANEOUS:
COMPONENT SHALL BE INDIVIDUALLY PACKAGED IN ACCORDANCE WITH L-COM SPEC. PS-0031.

ALL DIMENSIONS ARE FOR REFERENCE ONLY.

RoHS Compliant ✔

UNLESS OTHERWISE SPECIFIED,
DIMENSIONS ARE IN INCHES [mm]
OVERALL CABLE LENGTH TOLERANCE:
≤12 [305] = +1 [25] / -0
>12 [305] ≤60 [1524] = +2 [51] / -0
>60 [1524] ≤120 [3048] = +4 [102] / -0
>120 [3048] ≤300 [7620] = +6 [152] / -0
>300 [7620] = +5% / -0%
ALL OTHER DIMENSIONAL TOLERANCES:
.X = ± .2
.XX = ± .02
.XXX = ±.005

PROJECTION

APPROVALS	DATE
DRAWN BY D. CASTRO	6/29/10
CHECKED BY K. BURGNER	6/29/10
APPROVED BY K. BURGNER	6/29/10

CONFIGURATION DETAILS OF UNDIMENSIONED FEATURES MAY VARY

COLOR VARIATIONS MAY OCCUR

L-COM Global Connectivity
45 BEECHWOOD DRIVE
NORTH ANDOVER, MA
01845

CATEGORY: COAXIAL

PRODUCT DESCRIPTION: ADP,RP-SMA JACK/N-FEMALE BLKHD

SIZE	FSCM NO.	DWG. NO.	REV.
A	43321	AXA-RSJNFB	A

SCALE: NONE | CAD FILE: AXA-RSJNFB.SLDDRW | SHEET 1 OF 1